由 Autodesk 教育版产品制作

NO.	PART NO.	NAME	MATERIAL	CLOLR	QTY
1	A02-C4DXX2000	USB A/F 短体10.6两个鱼叉脚1.90(无翻边)	Copper Alloy/SPCC		1PCS
2	A02-A0DDXXXX0	USB A/F 短体10.6胶芯	PBT		1PCS
3	A02-B2DXX0000	USB A/F 90° DIP短端子(2.3无短路)	Copper Alloy		4PCS

REVISIONS

LET	DESCRIPTION	DATE
AX1	试行版	2011.08.26
A	重新修订图面	2011.09.09

NOTES:

1. MATERIAL SPECIFCATION
   1) INSULATION MATERIAL THERMOPLASTIC.
   2) SHELL:COPPER ALLOY/SPCC,T:0.30mm
      PLATING: NICKEL
   3) TERMINAL:COPPER ALLOY,T:0.25mm
      PLATING: GOLD/TIN PLATED.
2. ELECTRICAL CHARACTERISTIC:
   1)INSULATION RESISTANCE:1000MΩ MIN.
   2)CONTACT RESISTANCE:30mΩ MAX.
   3)WITHSTANDING VOLTAGE:500V AC.
3. MECHANICAL CHARACTERISTICS:
   1)INSERTION FORCE:3.57Kgf MAX.
   2)EXTRACTION FORCE:1.02Kgf MIN.

ORDERING INFORMATION

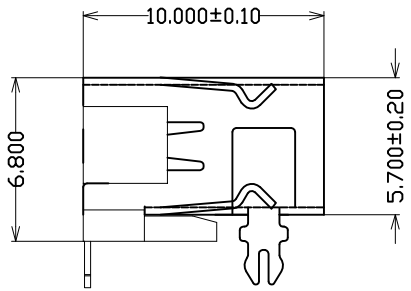

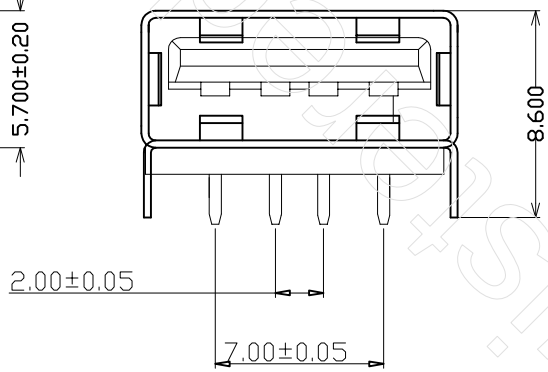

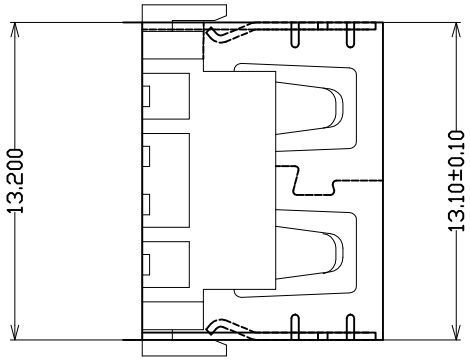

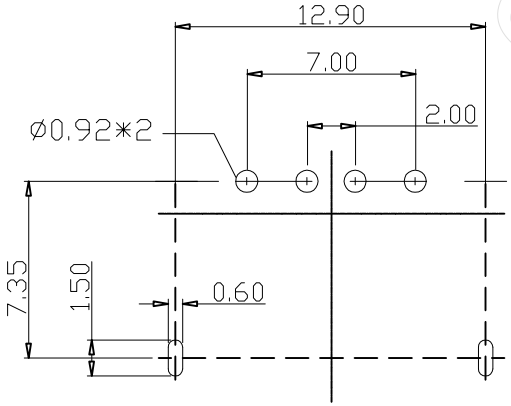

RECOMMENDED P.C.B LAYOUT

深圳市鑫南天科技有限公司
Shenzhen XinNanTian Industrial Co.,Ltd

TOLERANCE	X.	X.X	X.XX	X.XXX	X.°
A	± 0.20	± 0.10	± 0.05	± 0.03	± 1°
B	± 0.50	± 0.20	± 0.10	± 0.05	± 2°
✓ C	± 0.10	± 0.05	± 0.02	± 0.01	± 0.5°

MATERIAL:	UNIT: M/M	THIRD ANGLE	DRAWING BY: SU
SUPERFICIES:	SCALE: 1:1		CHECK BY: QING
COLOR:	REV: A		APPROVED: LEE
			DATE: 2011.09.09

Brand/Model: USB A/F 90° DIP短体10.0

PART NAME: Assembly

DRAWING NO. A 02-DXXXXX0X-0063

USER'S OR TOOLING NO. XL001-1B-1

由 Autodesk 教育版产品制作